Digital Design : 2021-22
Lecture 21 : State Table Reduction & Implication Chart

By Dr. Sanjay Vidhyadharan

sanjayvidhyadharan.in

Design of Clocked Sequential Circuits

Design of sequence detector overlapping (1001)

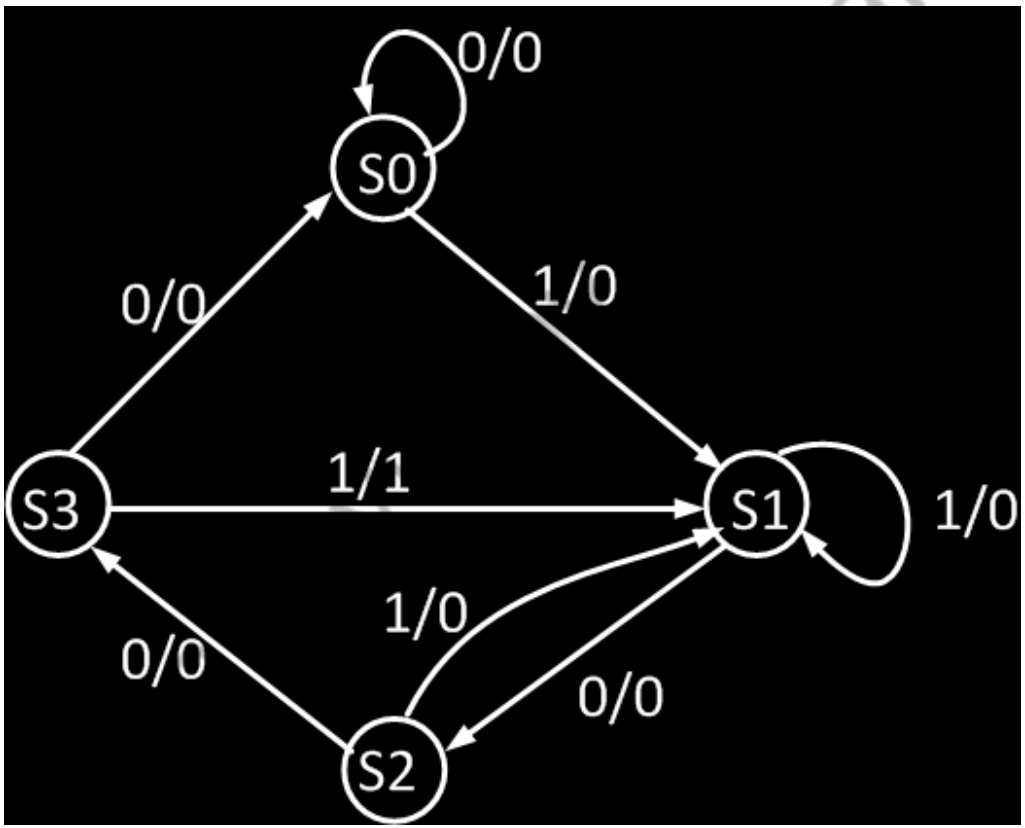

S0 – 00
S1 – 01
S2 – 10
S3 – 11

ELECTRICAL ELECTRONICS COMMUNICATION INSTRUMENTATION

Design of Clocked Sequential Circuits

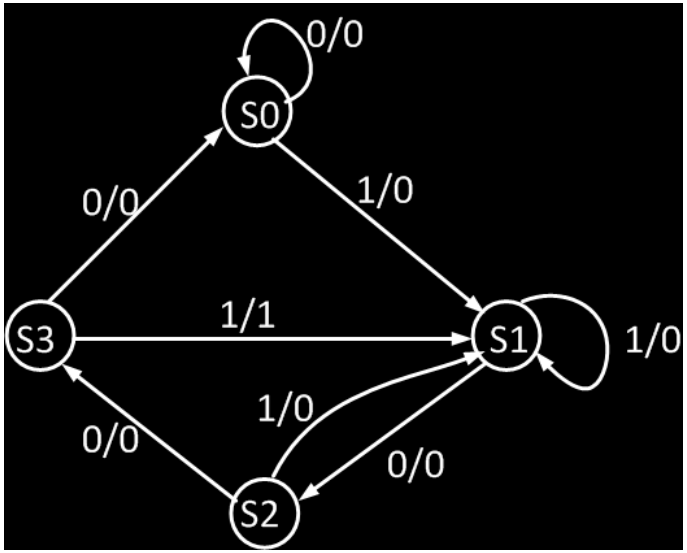

Present State			in	Next State			Out
	Q_A	Q_B	X		$Q_{A(t+1)}$	$Q_{B(t+1)}$	Y
S0	0	0	0	S0	0	0	0
S0	0	0	1	S1	0	1	0
S1	0	1	0	S2	1	0	0
S1	0	1	1	S1	0	1	0
S2	1	0	0	S3	1	1	0
S2	1	0	1	S1	0	1	0
S3	1	1	0	S0	0	0	0
S3	1	1	1	S1	0	1	1

S0 – 00
S1 – 01
S2 – 10
S3 – 11

sanjayvidhyadharan.in

Design of Clocked Sequential Circuits

Present State			in	Next State			Out
	Q_A	Q_B	X		$Q_{A(t+1)}$	$Q_{B(t+1)}$	Y
S0	0	0	0	S0	0	0	0
S0	0	0	1	S1	0	1	0
S1	0	1	0	S2	1	0	0
S1	0	1	1	S1	0	1	0
S2	1	0	0	S3	1	1	0
S2	1	0	1	S1	0	1	0
S3	1	1	0	S0	0	0	0
S3	1	1	1	S1	0	1	1

D_A	D_B
0	0
0	1
1	0
0	1
1	1
0	1
0	0
0	1

$D_A = Q_A'Q_BX' + Q_AQ_B'X'$

$Y = Q_AQ_BX$

sanjayvidhyadharan.in

Design of Clocked Sequential Circuits

$D_A = Q_A'Q_BX' + Q_AQ_B'X' = (Q_A \oplus Q_B)\, X'$ $\qquad$ $Y = Q_AQ_BX$

$D_B = X + Q_AQ_B'$

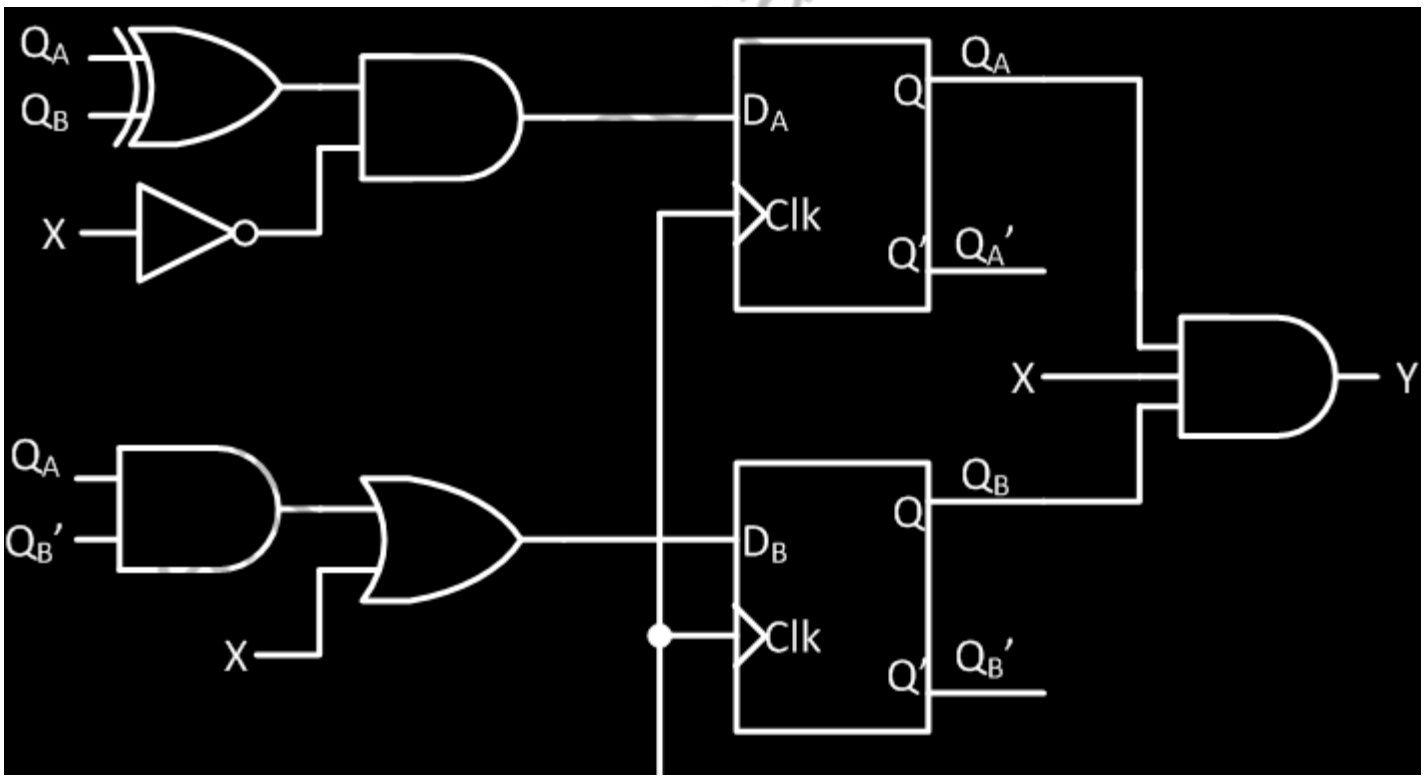

Clock

State Table Reduction

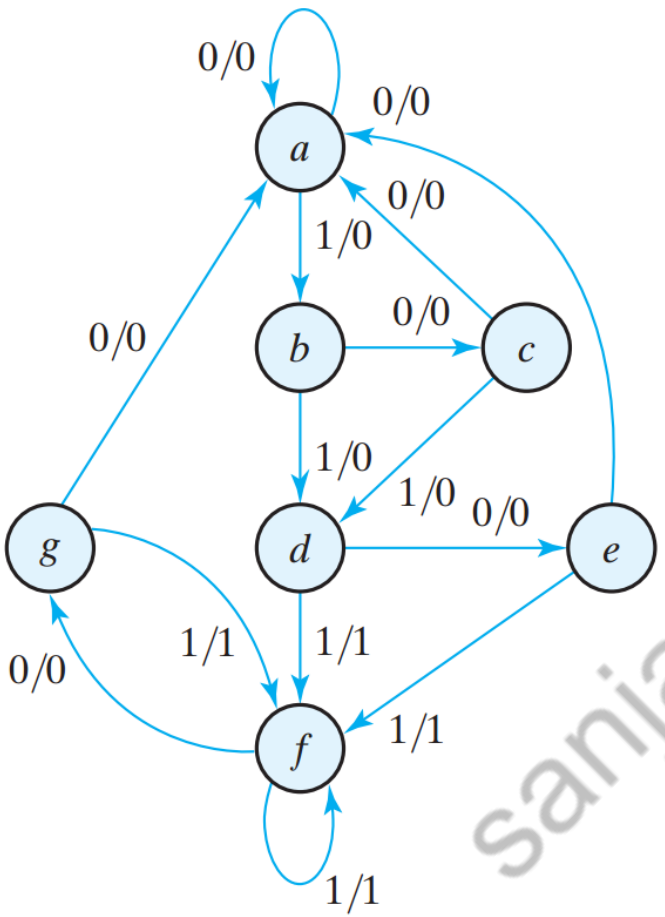

State Table

Present State	Next State $x = 0$	Next State $x = 1$	Output $x = 0$	Output $x = 1$
a	a	b	0	0
b	c	d	0	0
c	a	d	0	0
d	e	f	0	1
e	a	f	0	1
f	g	f	0	1
g	a	f	0	1

e

sanjayvidhyadharan.in

State Table Reduction

Reducing the State Table

Present State	Next State $x = 0$	Next State $x = 1$	Output $x = 0$	Output $x = 1$
a	a	b	0	0
b	c	d	0	0
c	a	d	0	0
d	e	d f	0	1
e	a	d f	0	1
~~f~~	~~e~~	~~f~~	~~0~~	~~1~~

sanjayvidhyadharan.in

State Table Reduction

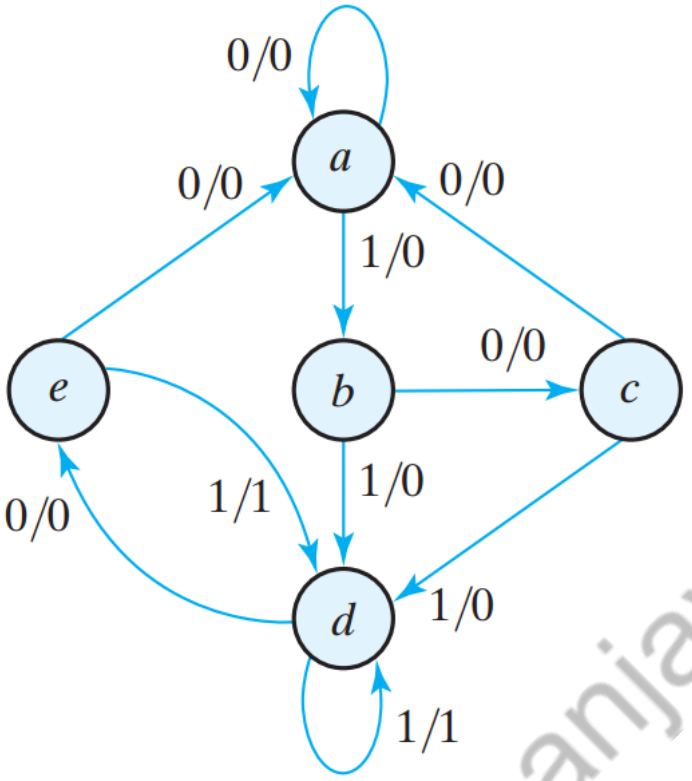

Reduced State Table

Present State	Next State $x = 0$	Next State $x = 1$	Output $x = 0$	Output $x = 1$
a	a	b	0	0
b	c	d	0	0
c	a	d	0	0
d	e	d	0	1
e	a	d	0	1

sanjayvidhyadharan.in

State Table Reduction

Reduced State Table

Present State	Next State $x = 0$	Next State $x = 1$	Output $x = 0$	Output $x = 1$
a	a	b	0	0
b	c	d	0	0
c	a	d	0	0
d	e	d	0	1
e	a	d	0	1

Three Possible Binary State Assignments

State	Assignment 1, Binary	Assignment 2, Gray Code	Assignment 3, One-Hot
a	000	000	00001
b	001	001	00010
c	010	011	00100
d	011	010	01000
e	100	110	10000

sanjayvidhyadharan.in

State Table Reduction : Example 2

Reduce the number of states in the following table and tabulate the reduced state table.

PRESENT STATE	NEXT STATE		OUTPUT	
	X=0	X=1	X=0	X=1
a	f	b	0	0
b	d	c	0	0
c	f	e	0	0
d	g	a	1	0
e	d	c	0	0
f	f	b	1	1
g	g	h	0	1
h	g	a	1	0

sanjayvidhyadharan.in

State Table Reduction : Example 2

Reduce the number of states in the following table and tabulate the reduced state table.

States b,e are the same ,we will replace state e with state b .
States d,h are the same ,we will replace state h with state d .

PRESENT STATE	NEXT STATE		OUTPUT	
	X=0	X=1	X=0	X=1
a	f	b	0	0
b	d	c	0	0
c	f	b	0	0
d	g	a	1	0
f	f	b	1	1
g	g	d	0	1

sanjayvidhyadharan.in

State Table Reduction : Example 2

Reduce the number of states in the following table and tabulate the reduced state table.

States a,c are the same ,we will replace state c with state a .

PRESENT STATE	NEXT STATE		OUTPUT	
	X=0	X=1	X=0	X=1
a	f	b	0	0
b	d	a	0	0
d	g	a	1	0
f	f	b	1	1
g	g	d	0	1

sanjayvidhyadharan.in

Implication Chart

Current State	Next State		Output (Z)	
	$A = 0$	$A = 1$	$A = 0$	$A = 1$
S0	S3	S2	1	1
S1	S0	S4	0	0
S2	S3	S0	1	1
S3	S1	S3	0	0
S4	S2	S1	0	0

State table

sanjayvidhyadharan.in

Implication Chart

Current State	Next State		Output (Z)	
	$A=0$	$A=1$	$A=0$	$A=1$
S0	S3	S2	1	1
S1	S0	S4	0	0
S2	S3	S0	1	1
S3	S1	S3	0	0
S4	S2	S1	0	0

State table

S1	×			
S2	✓	×		
S3	×	(S0,S1) (S3,S4)	×	
S4	×	(S0,S2)	×	(S1,S2) (S1,S3)
	S0	S1	S2	S3

Implication chart

sanjayvidhyadharan.in

Implication Chart

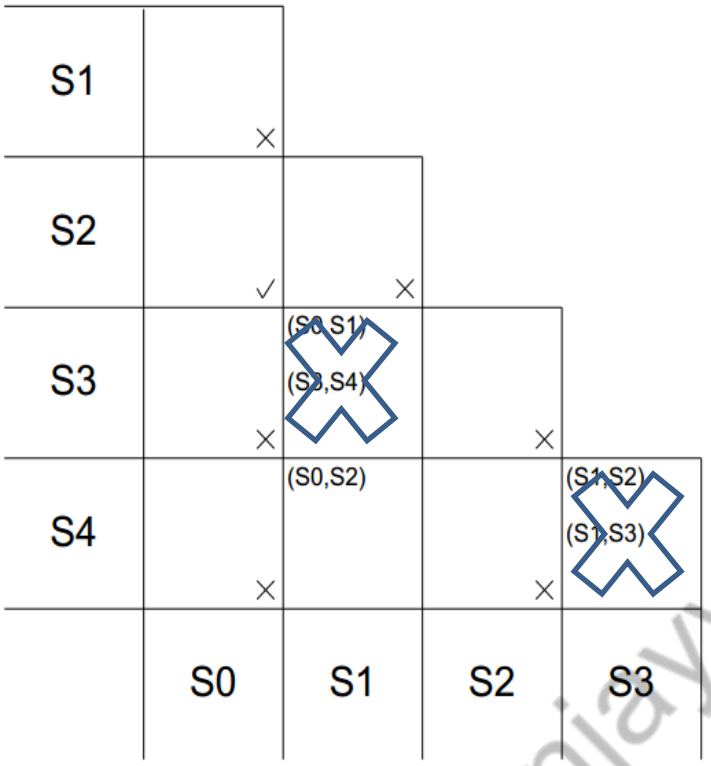

Implication chart

Current State	Next State $A=0$	Next State $A=1$	Output (Z) $A=0$	Output (Z) $A=1$
S0	S3	S2	1	1
S1	S0	S4	0	0
S2	S3	S0	1	1
S3	S1	S3	0	0
S4	S2	S1	0	0

Current State	Next State $A=0$	Next State $A=1$	Output (Z) $A=0$	Output (Z) $A=1$
S0	S3	S0	1	1
S1	S0	S1	0	0
S3	S1	S3	0	0

sanjayvidhyadharan.in

Implication Chart: Example 2

State Table to be Reduced.

Present State	Next State		Output	
	x=0	x=1	x=0	x=1
a	d	a	0	0
b	e	a	0	0
c	g	f	0	1
d	a	d	1	0
e	a	d	1	0
f	c	b	0	0
g	a	e	1	0

sanjayvidhyadharan.in

Implication Chart: Example 2

Optimize using Implication Table .

State Table to be Reduced.

Present State	Next State		Output	
	x=0	x=1	x=0	x=1
a	d	a	0	0
b	e	a	0	0
c	g	f	0	1
d	a	d	1	0
e	a	d	1	0
f	c	b	0	0
g	a	e	1	0

	a	b	c	d	e	f
b	(d,e) √					
c	x	x				
d	x	x	x			
e	x	x	x	√		
f	(c,d) (a,b)	(c,e) (a,b)	x	x	x	
g	x	x	x	(d,e) √	(d,e) √	x

sanjayvidhyadharan.in

Implication Chart: Example 2

3. Optimize using Implication Table .

Reduced State Table.

Present State	Next State		Output	
	x=0	x=1	x=0	x=1
a	d	a	0	0
c	d	f	0	1
d	a	d	1	0
f	c	a	0	0

	a	b	c	d	e	f
b	(d,e) √					
c	x	x				
d	x	x	x			
e	x	x	x	√		
f	(c,d) (a,b)	(c,e) (a,b)	x	x	x	
g	x	x	x	(d,e) √	(d,e) √	x

sanjayvidhyadharan.in

Thank you

sanjayvidhyadharan.in